REVISION RECORD			
LTR	ECO NO:	APPROVED:	DATE:

SDM660 GPIO Configuration For Starlord

GPIO_0	BLSP_SPI_MOSI_1	GPIO_42	NC	GPIO_84	UIM2_CLK
GPIO_1	BLSP_SPI_MISO_1	GPIO_43	NC	GPIO_85	UIM2_RESET
GPIO_2	BLSP_SPI_CS1_N_1	GPIO_44	NC	GPIO_86	UIM2_PRESENT
GPIO_3	BLSP_SPI_CLK_1	GPIO_45	NC	GPIO_87	UIM1_DATA
GPIO_4	BLSP_UART_TX_2	GPIO_46	CAM0_RST_N	GPIO_88	UIM1_CLK
GPIO_5	BLSP_UART_RX_2	GPIO_47	CAM1_RST_N	GPIO_89	UIM1_RESET
GPIO_6	BLSP_I2C_SDA_2	GPIO_48	CAM2_RST_N	GPIO_90	UIM1_PRESENT
GPIO_7	BLSP_I2C_SCL_2	GPIO_49	NC	GPIO_91	UIM_BATT_ALARM
GPIO_8	BLSP_SPI_MOSI_3	GPIO_50	CAM_AVDD_EN	GPIO_92	GRFC_0
GPIO_9	BLSP_SPI_MISO_3	GPIO_51	CAM_AVDD_EN	GPIO_93	NC
GPIO_10	BLSP_SPI_CS_N_3	GPIO_52	NC	GPIO_94	NC
GPIO_11	BLSP_SPI_CLK_3	GPIO_53	LCD0_RESET_N	GPIO_95	NC
GPIO_12	NC	GPIO_54	SD_CARD_DET_N	GPIO_96	WDOG_DISABLE
GPIO_13	NC	GPIO_55	DP_EN_N	GPIO_97	NC
GPIO_14	BLSP_I2C_SDA_4	GPIO_56	USBC_ORIENTATION	GPIO_98	NC
GPIO_15	BLSP_I2C_SCL_4	GPIO_57	FORCED_USB_BOOT	GPIO_99	QLINK_REQUEST
GPIO_16	BLSP_UART_TX_5	GPIO_58	USB_PHY_PS	GPIO_100	QLINK_ENABLE
GPIO_17	BLSP_UART_RX_5	GPIO_59	MDP_VSYNC_P	GPIO_101	RFFE1_DATA - WTR6955 debug
GPIO_18	BLSP_UART_CTS_N_5	GPIO_60	NC	GPIO_102	RFFE1_CLK - WTR6955 debug
GPIO_19	BLSP_UART_RFR_N_5	GPIO_61	NC	GPIO_103	RFFE2_DATA - (42)QFE2101 ch0, (43)QFE4360
GPIO_20	FP_SUB_RESET	GPIO_62	NC	GPIO_104	RFFE2_CLK - (42)QFE2101 ch0, (43)QFE4360
GPIO_21	SMB_STAT	GPIO_63	NC	GPIO_105	NC
GPIO_22	BLSP_I2C_SDA_6	GPIO_64	NC	GPIO_106	NC
GPIO_23	BLSP_I2C_SCL_6	GPIO_65	NC	GPIO_107	RFFE4_DATA - (53)QAT3514, (53)QAT3550
GPIO_24	NC	GPIO_66	TS_RESET_N	GPIO_108	RFFE4_CLK - (53)QAT3514, (53)QAT3550
GPIO_25	NC	GPIO_67	TS_INT_N	GPIO_109	RFFE5_DATA
GPIO_26	WSA_SPKR_SD_N_1	GPIO_68	ACC_GYRO_DATA_AVA_INT_N	GPIO_110	RFFE5_CLK
GPIO_27	WSA_SPKR_SD_N_2	GPIO_69	ACC_GYRO_MOT_INT_N	GPIO_111	RFFE6_DATA
GPIO_28	NFC_IRQ	GPIO_70	MAG_INT_N	GPIO_112	RFFE6_CLK
GPIO_29	NFC_EN	GPIO_71	ALSP_INT_N	GPIO_113	NC
GPIO_30	NFC_DWL_REQ	GPIO_72	FP_INT_N_1	SSC_0	LPI_SPI_1_CS1_N
GPIO_31	NFC_ESE_PWR_REQ	GPIO_73	NC	SSC_1	LPI_PWR_EN
GPIO_32	CAM_MCLK0	GPIO_74	NC	SSC_2	LPI_I2C_3_SDA
GPIO_33	CAM_MCLK1	GPIO_75	NC	SSC_3	LPI_I2C_3_SCL
GPIO_34	CAM_MCLK2	GPIO_76	NC	SSC_4	LPI_SPI_2_CS_N
GPIO_35		GPIO_77	AUDIO_USBC_EN2_N	SSC_5	LPI_SPI_2_CLK
GPIO_36	CCI_I2C_SDA0	GPIO_78	WMSS_RESETN	SSC_6	LPI_SPI_2_MOSI
GPIO_37	CCI_I2C_SCL0	GPIO_79	PWM_CNTRL	SSC_7	LPI_SPI_2_MISO
GPIO_38	CCI_I2C_SDA1	GPIO_80	AUDIO_USBC_EN1	SSC_8	LPI_SPI_1_CS_N
GPIO_39	CCI_I2C_SCL1	GPIO_81	MSS_LTE_COXM_TXD	SSC_9	LPI_SPI_1_CS_N
GPIO_40	NC	GPIO_82	MSS_LTE_COXM_RXD	SSC_10	LPI_SPI_1_MOSI
GPIO_41	FL_STROBE_TRIG	GPIO_83	UIM2_DATA	SSC_11	LPI_SPI_1_MISO

SSC_12	LPI_UART_1_TX
SSC_13	LPI_UART_1_RX
SSC_14	NC
SSC_15	NC
SSC_16	NC
SSC_17	NC
SSC_18	WCD_SDM_MCLK
SSC_19	LPI_AUD_SB_CLK
SSC_20	LPI_AUD_SB_DATA0
SSC_21	LPI_AUD_SB_DATA1
SSC_22	LPI_AUD_CDC_INT1
SSC_23	LPI_AUD_CDC_INT2
SSC_24	LPI_AUD_CDC_RSTN
SSC_25	NC
SSC_26	NC
SSC_27	NC
SSC_29	NC
SSC_30	LPI_QCA_SB_CLK
SSC_31	LPI_QCA_SB_DATA0

GROOT GPIO Configuration For Starlord

GPIO_1	OPTION1	GPIO_8	SLB
GPIO_2	DIV_CLK2	GPIO_9	uUSB_TYPEC
GPIO_3	DIV_CLK1	GPIO_10	WCSS_VCTRL
GPIO_4	NFC_CLK_REQ	GPIO_11	HOMEKEY_FP_PM_INT
GPIO_5	WLAN_SW_CTRL	GPIO_12	WIPWR_MODE
GPIO_6	SLP_CLK	GPIO_13	PM_A_GPIO_13
GPIO_7	UIM_BATT_ALARM		

DRAX GPIO Configuration For Starlord

GPIO_1	OPTION2	GPIO_8	SD_CARD_DET_N
GPIO_2	LPI_PWR_EN	GPIO_9	WCSS_VCTRL
GPIO_3	FRONT_CAM_DVDD_EN	GPIO_10	SLB
GPIO_4	REAR_CAM_DVDD_EN	GPIO_11	LP4x_CTRL
GPIO_5	NC	GPIO_12	LP4x_MODE
GPIO_6	FP_VDD_EN		
GPIO_7	KEY_VOL_UP_N		

		COMPANY: <Company Name>			
		TITLE: <Title>			
DRAWN: <Drawn By>	DATED: <Drawn Date>				
CHECKED: <Checked By>	DATED: <Checked Date>	CODE:	SIZE:	DRAWING NO:	REV:
QUALITY CONTROL: <QC By>	DATED: <QC Date>	<Code>	A0	<Drawing Number>	<Revision>
RELEASED: <Released By>	DATED: <Release Date>	SCALE: <Scale>		SHEET: 1 OF 21	

REVISION RECORD			
LTR	ECO NO:	APPROVED:	DATE:

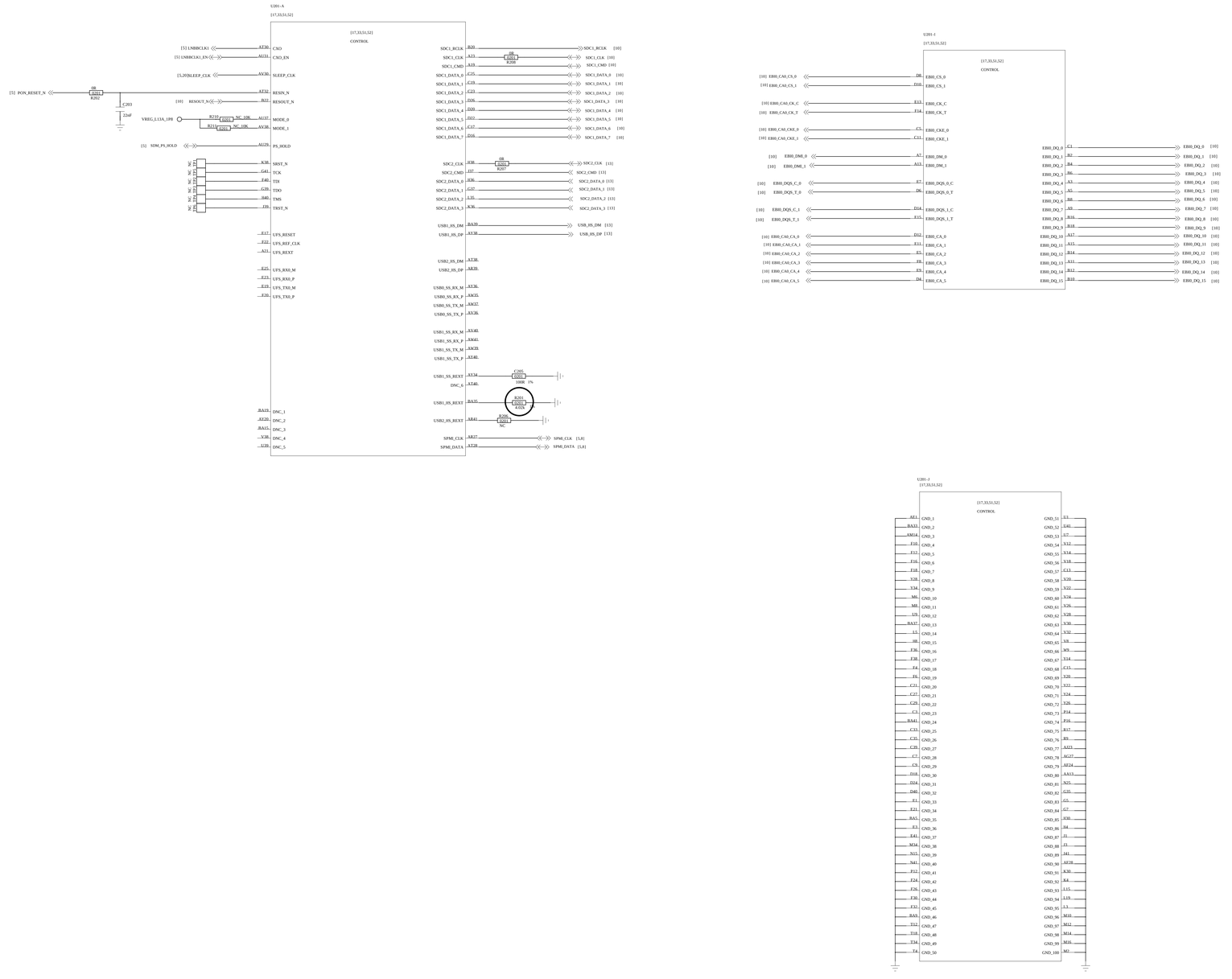

COMPANY: <Company Name>				
TITLE: <Title>				
DRAWN: <Drawn By>	DATED: <Drawn Date>	CODE: <Code>	SIZE: A0	DRAWING NO: <Drawing Number> REV: <Revision>
CHECKED: <Checked By>	DATED: <Checked Date>			
QUALITY CONTROL: <QC By>	DATED: <QC Date>			
RELEASED: <Released By>	DATED: <Release Date>	SCALE: <Scale>	SHEET: 2 OF 21	

REVISION RECORD			
LTR	ECO NO:	APPROVED:	DATE:

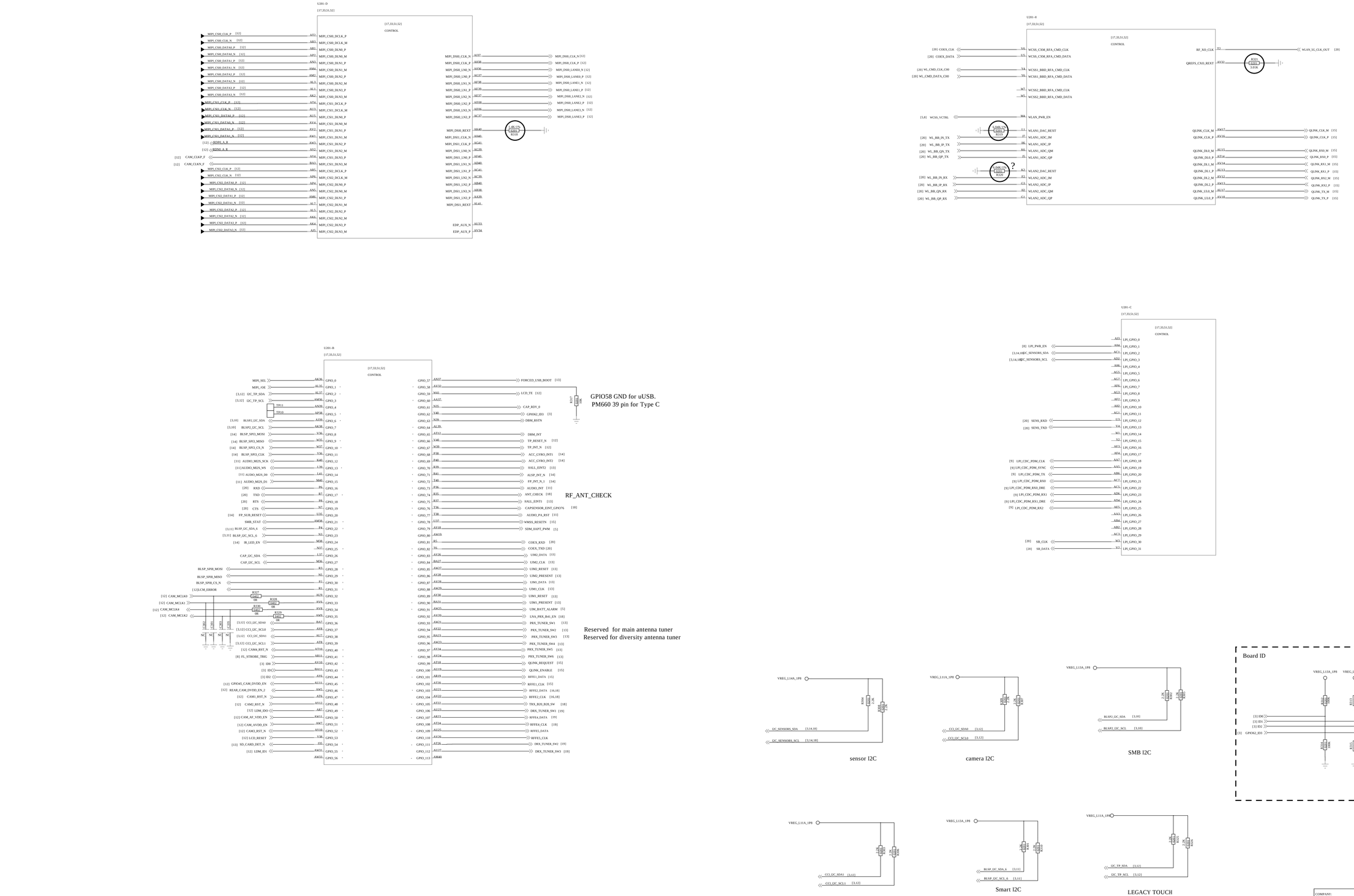

DRAWN: <Drawn By>	DATED: <Drawn Date>	COMPANY: <Company Name>	
CHECKED: <Checked By>	DATED: <Checked Date>	TITLE: <Title>	
QUALITY CONTROL: <QC By>	DATED: <QC Date>	CODE: <Code> / SIZE: A0	DRAWING NO: <Drawing Number> / REV: <Revision>
RELEASED: <Released By>	DATED: <Release Date>	SCALE: <Scale>	SHEET: 3 OF 21

REVISION RECORD			
LTR	ECO NO:	APPROVED:	DATE:

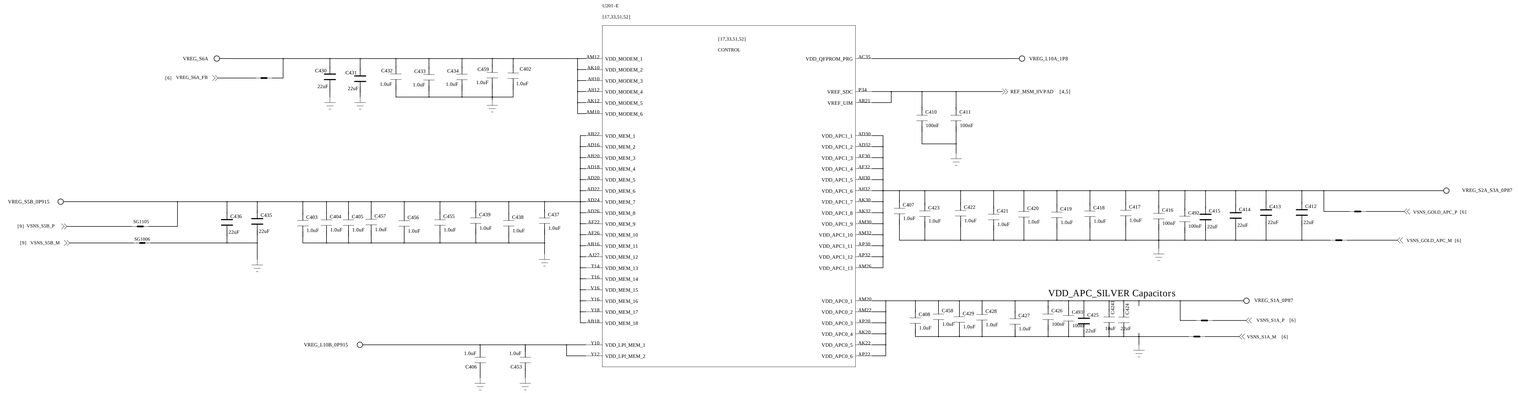

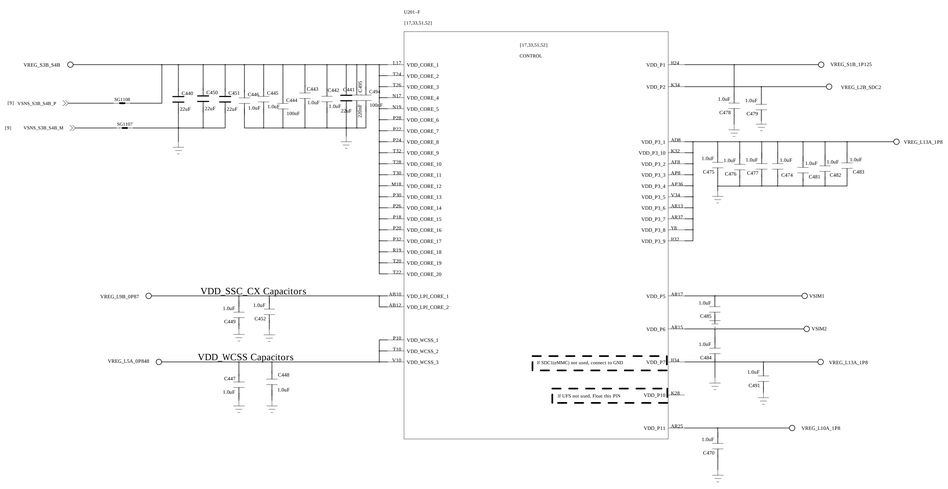

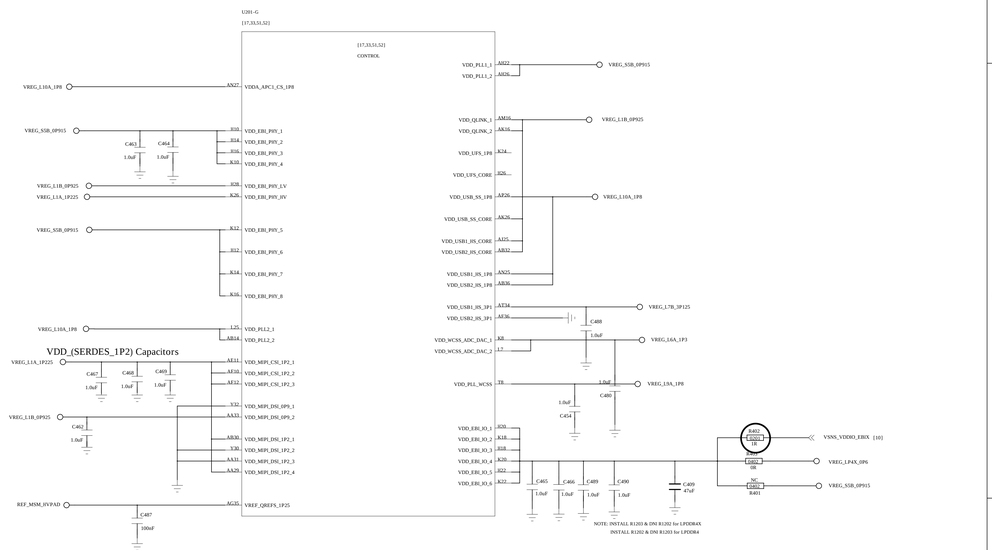

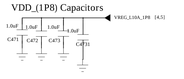

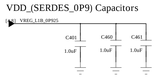

COMPANY: <Company Name>				
TITLE: <Title>				
DRAWN: <Drawn By>	DATED: <Drawn Date>	CODE: <Code>	SIZE: A0	DRAWING NO: <Drawing Number><Revision>
CHECKED: <Checked By>	DATED: <Checked Date>			
QUALITY CONTROL: <QC By>	DATED: <QC Date>			
RELEASED: <Released By>	DATED: <Release Date>	SCALE: <Scale>	SHEET: 4# 21	

REVISION RECORD			
LTR	ECO NO:	APPROVED:	DATE:

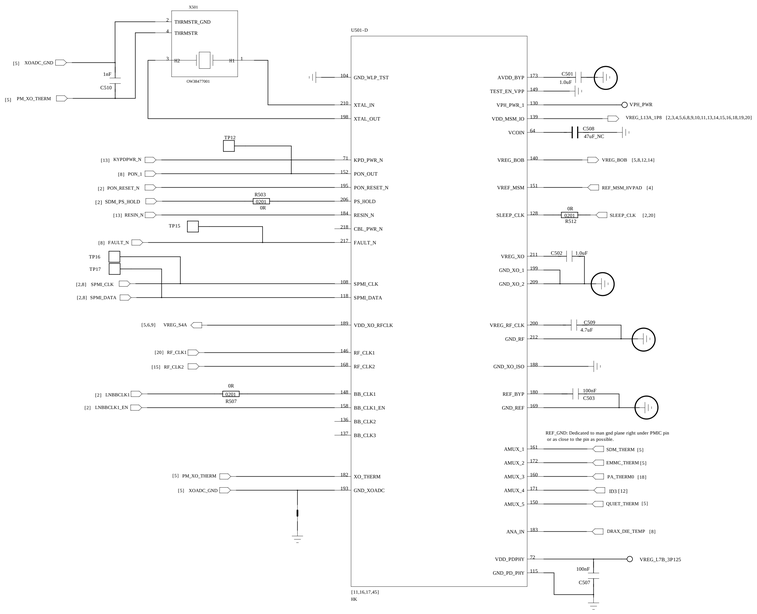

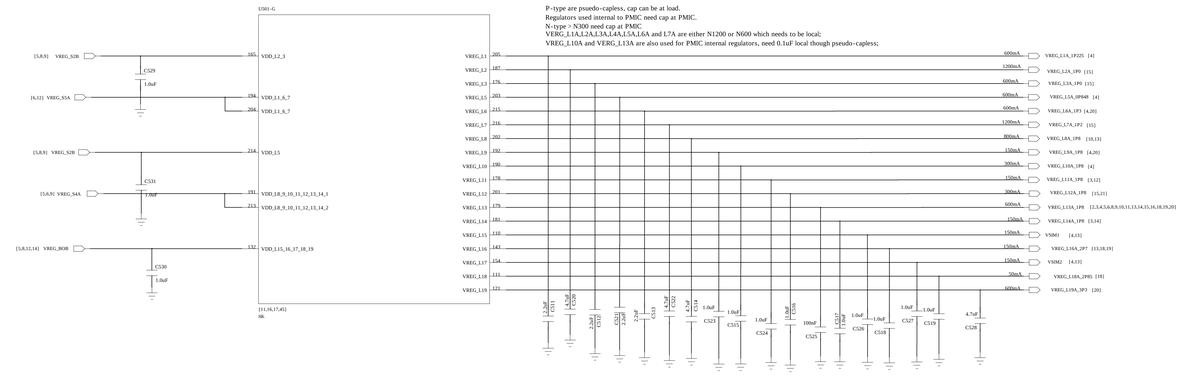

P-type are psuedo-capless, cap can be at load.
Regulators used internal to PMIC need cap at PMIC.
N-type > N300 need cap at PMIC
VEREG_L1A,L2A,L3A,L4A,L5A,L6A and L7A are either N1200 or N600 which needs to be local;
VEREG_L10A and VERG_L13A are also used for PMIC internal regulators, need 0.1uF local though pseudo-capless;

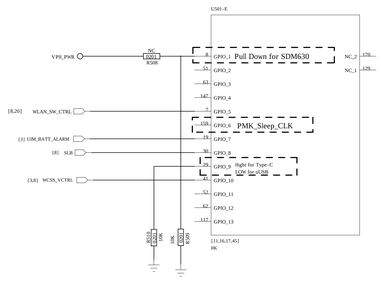

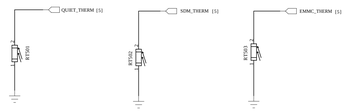

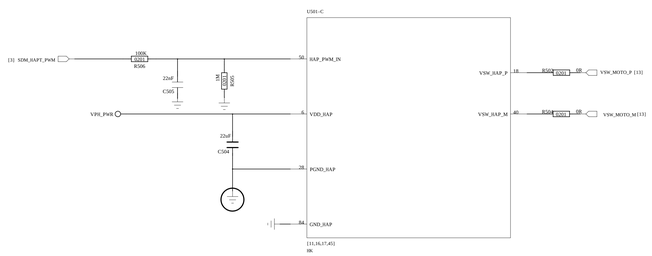

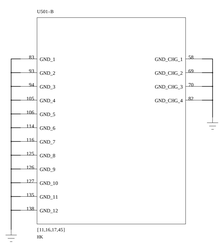

DRAWN: <Drawn By>	DATED: <Drawn Date>	COMPANY: <Company Name>			
		TITLE: <Title>			
CHECKED: <Checked By>	DATED: <Checked Date>	CODE: <Code>	SIZE: A0	DRAWING NO: <Drawing Number>	REV: <Revision>
QUALITY CONTROL: <QC By>	DATED: <QC Date>				
RELEASED: <Released By>	DATED: <Release Date>	SCALE: <Scale>		SHEET: 5 OF 21	

REVISION RECORD			
LTR	ECO NO:	APPROVED:	DATE:

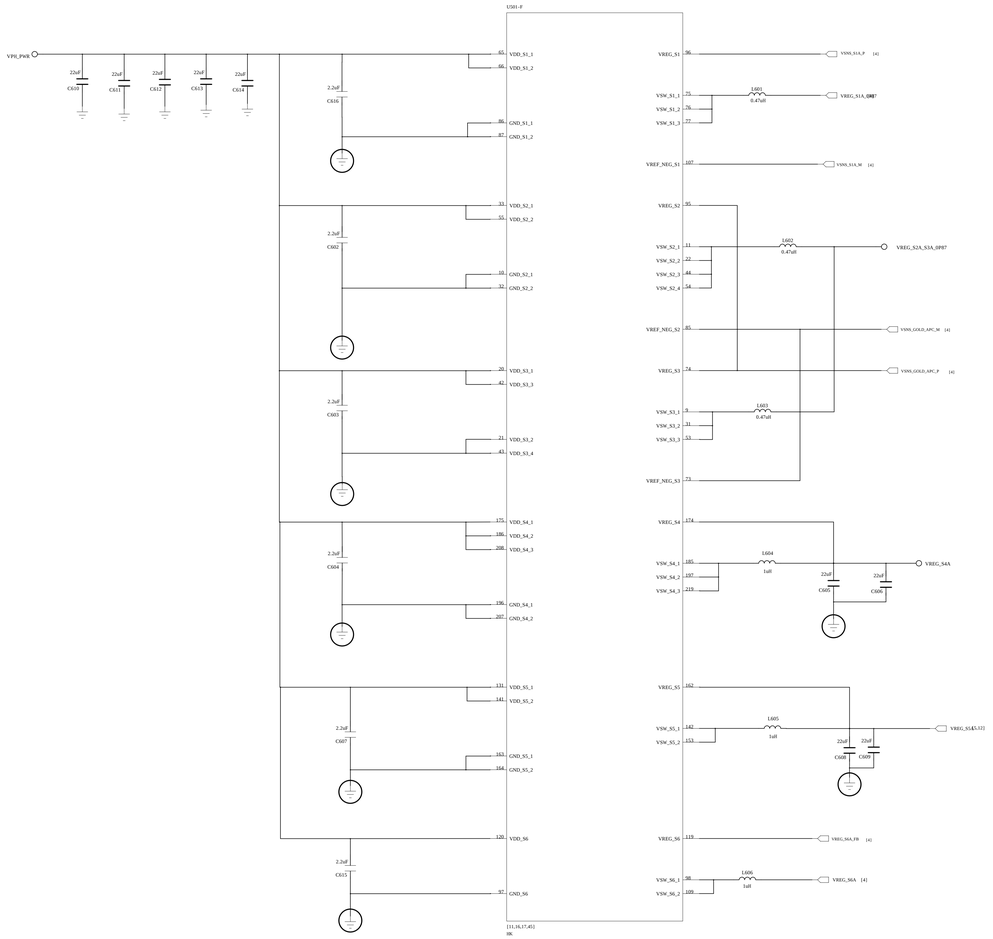

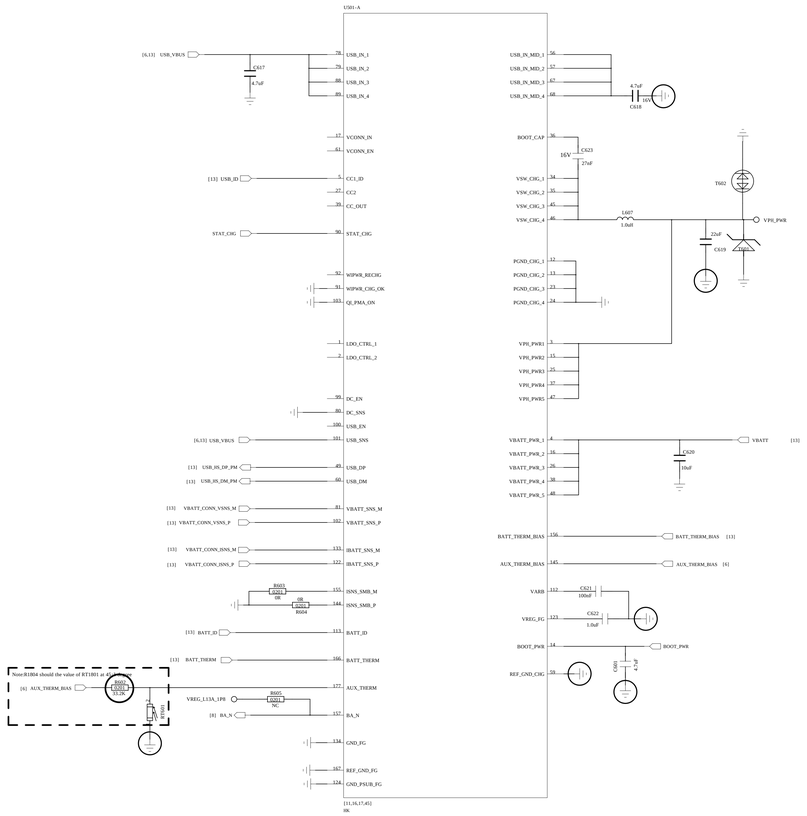

COMPANY: <Company Name>					
TITLE: <Title>					
DRAWN: <Drawn By>	DATED: <Drawn Date>				
CHECKED: <Checked By>	DATED: <Checked Date>	CODE: <Code>	SIZE: A0	DRAWING NO: <Drawing Number>	REV: <Revision>
QUALITY CONTROL: <QC By>	DATED: <QC Date>				
RELEASED: <Released By>	DATED: <Release Date>	SCALE: <Scale>		SHEET: 6 OF 21	

REVISION RECORD			
LTR	ECO NO:	APPROVED:	DATE:

COMPANY: <Company Name>					
TITLE: <Title>					
DRAWN: <Drawn By>	DATED: <Drawn Date>				
CHECKED: <Checked By>	DATED: <Checked Date>	CODE: <Code>	SIZE: A0	DRAWING NO: <Drawing Number>	REV: <Revision>
QUALITY CONTROL: <QC By>	DATED: <QC Date>				
RELEASED: <Released By>	DATED: <Release Date>	SCALE: <Scale>		SHEET: 7# 21	

REVISION RECORD			
LTR	ECO NO:	APPROVED:	DATE:

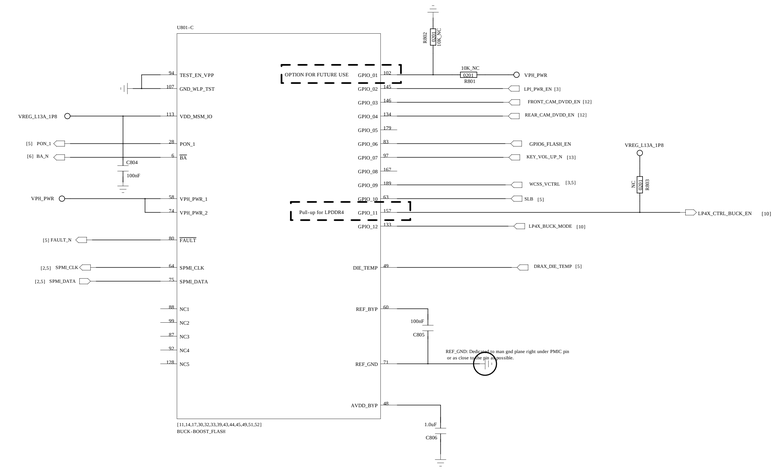

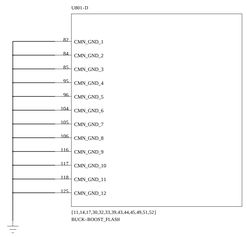

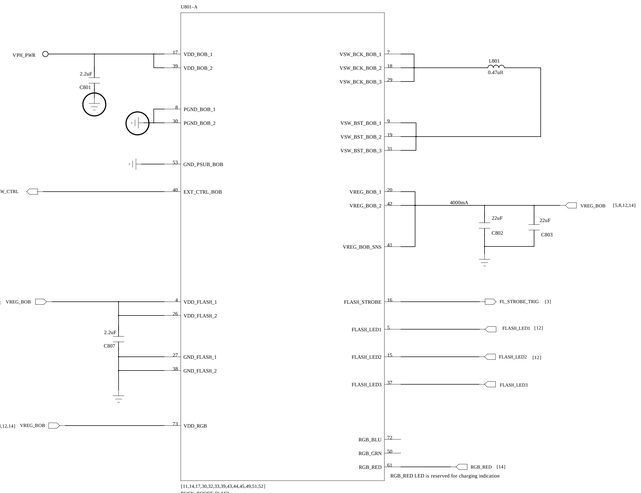

P-type are psuedo-capless, cap can be at load.
Regulators used internal to PMIC need cap at PMIC.
N-type > N300 need cap at PMIC
VERG_L9B is N600 which needs to be local;
VREG_L7B is also used for PMIC internal regulators, need 0.1uF local though pseudo-capless;

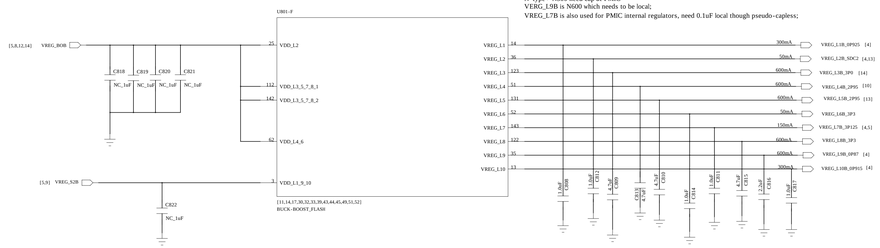

		COMPANY: <Company Name>			
		TITLE: <Title>			
DRAWN: <Drawn By>	DATED: <Drawn Date>				
CHECKED: <Checked By>	DATED: <Checked Date>	CODE: <Code>	SIZE: A0	DRAWING NO: <Drawing Number>	REV: <Revision>
QUALITY CONTROL: <QC By>	DATED: <QC Date>				
RELEASED: <Released By>	DATED: <Release Date>	SCALE: <Scale>		SHEET: 8/# 21	

REVISION RECORD			
LTR	ECO NO:	APPROVED:	DATE:

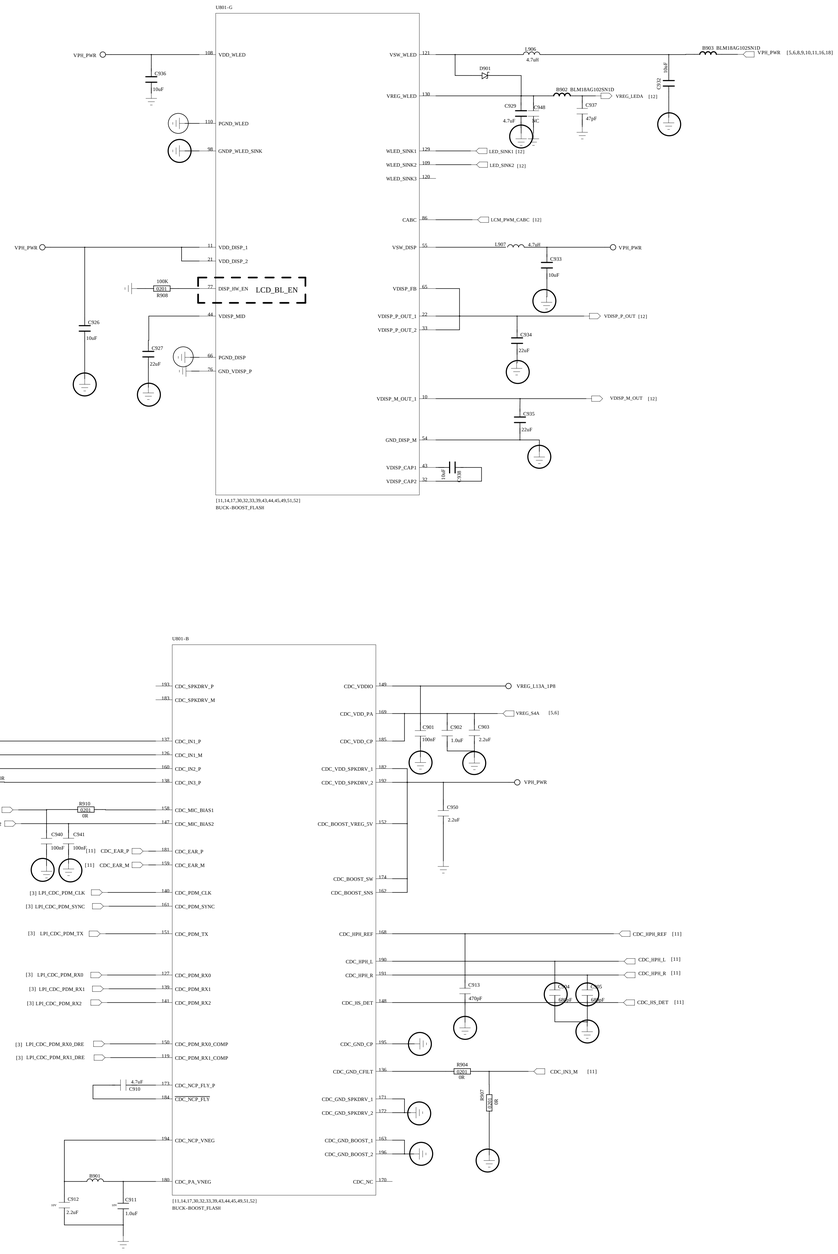

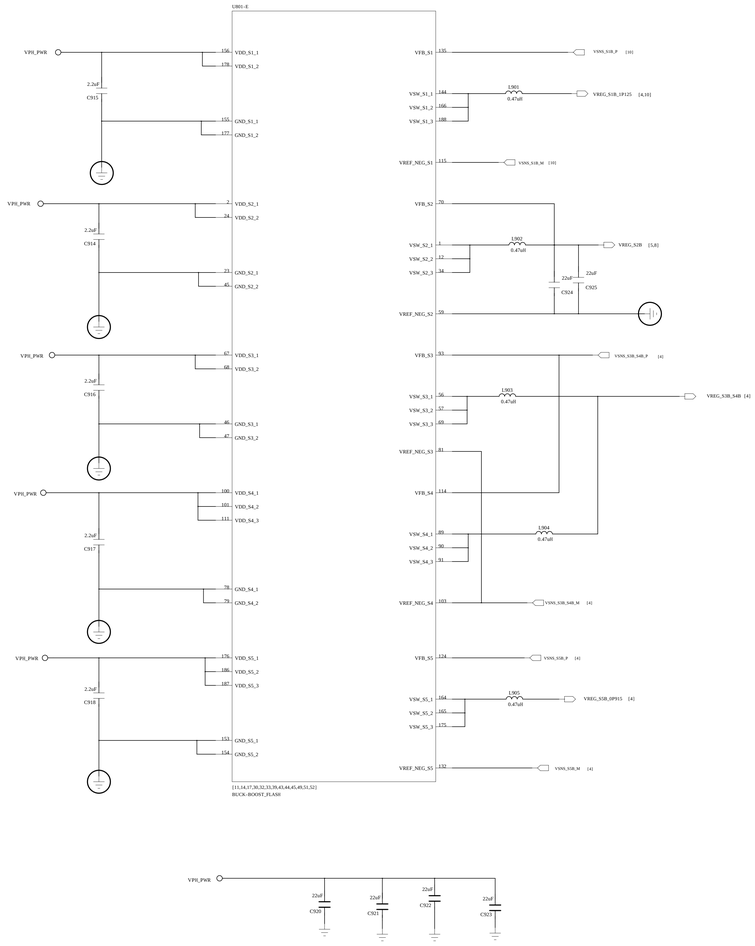

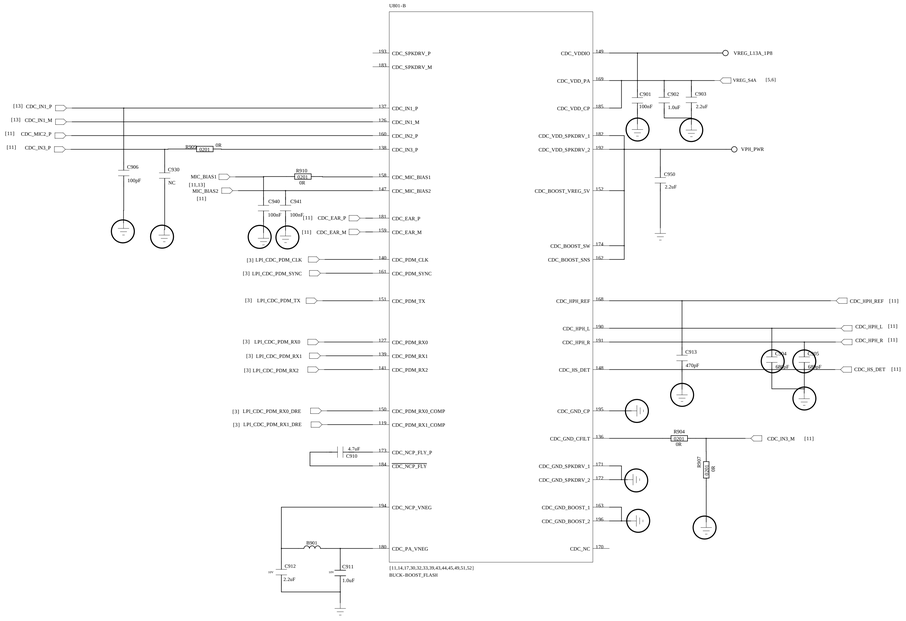

COMPANY: <Company Name>					
TITLE: <Title>					
DRAWN: <Drawn By>	DATED: <Drawn Date>				
CHECKED: <Checked By>	DATED: <Checked Date>	CODE:	SIZE:	DRAWING NO:	REV:
QUALITY CONTROL: <QC By>	DATED: <QC Date>	<Code>	A0	<Drawing Number><Revision>	
RELEASED: <Released By>	DATED: <Release Date>	SCALE: <Scale>		SHEET: 9 OF 21	

REVISION RECORD			
LTR	ECO NO:	APPROVED:	DATE:

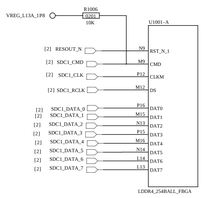

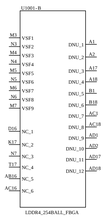

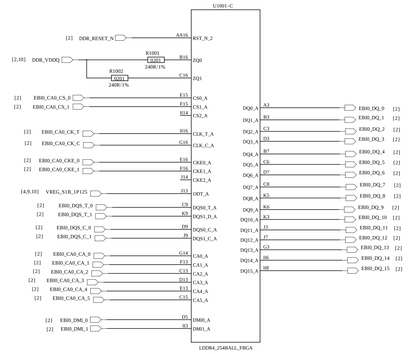

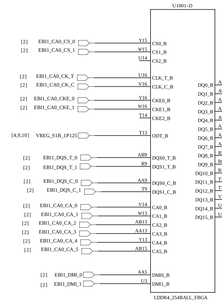

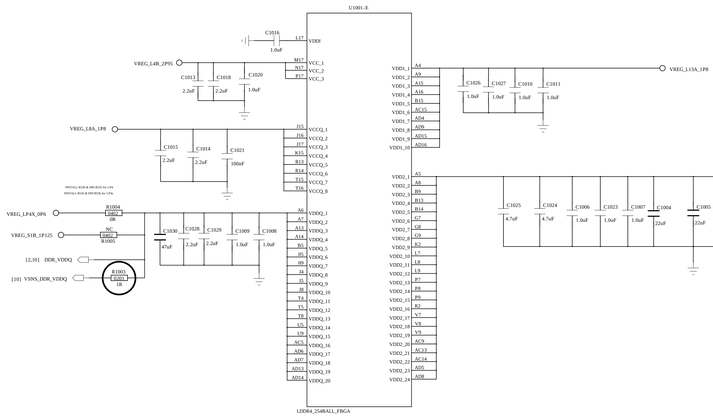

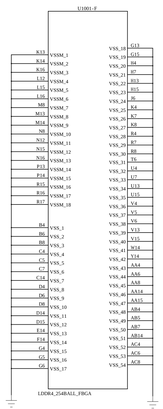

Buck for VDRAM

FAN53526 / Buck I2C address: 0X60 (Write:0xC0, Read:0xC1)

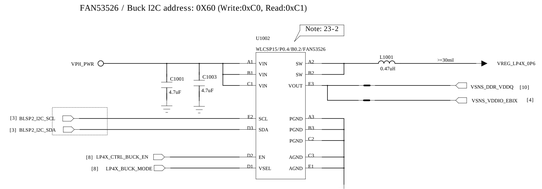

COMPANY: <Company Name>			
TITLE: <Title>			
DRAWN: <Drawn By>	DATED: <Drawn Date>		
CHECKED: <Checked By>	DATED: <Checked Date>		
QUALITY CONTROL: <QC By>	DATED: <QC Date>		
RELEASED: <Released By>	DATED: <Release Date>		
CODE: <Code>	SIZE: A0	DRAWING NO: <Drawing Number>	REV: <Revision>
SCALE: <Scale>		SHEET: 10 21	

REVISION RECORD			
LTR	ECO NO:	APPROVED:	DATE:

Sub MIC

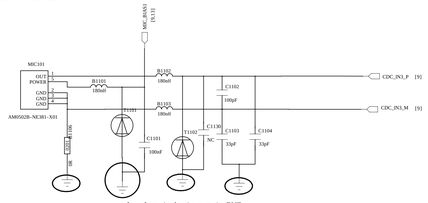

REC

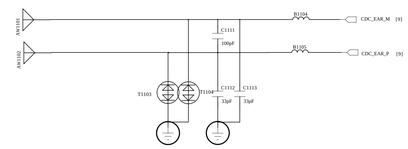

Smart PA

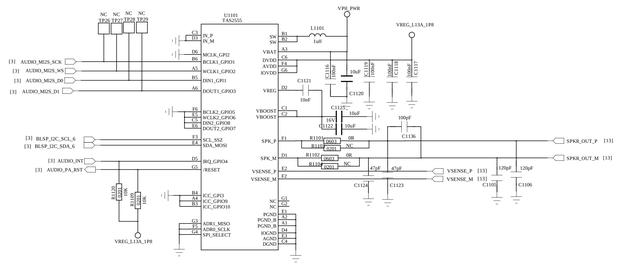

Earphone Audio

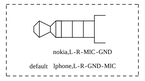

Note: Ferrite beads and their corresponding bypass capacitors on
on CDC_HPH_L, P, CDC_HPH_L, M and CDC_HPH_REF
are needed to reduce noise generated by audio/FM concurrency

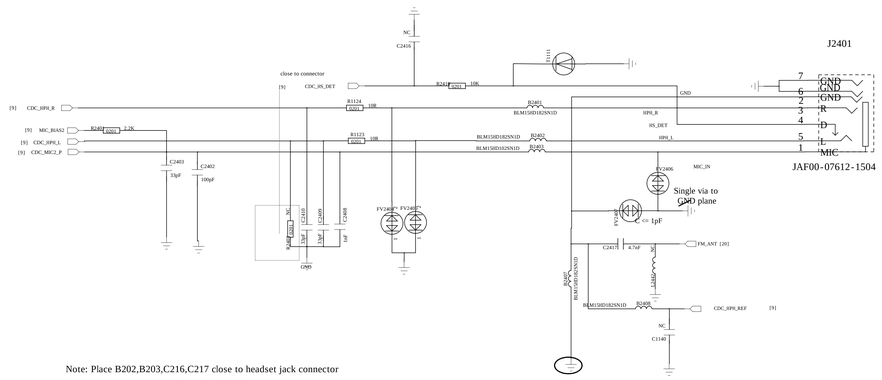

Note: Place B202,B203,C216,C217 close to headset jack connector

Note: For Cable detection

DRAWN: <Drawn By>	DATED: <Drawn Date>	COMPANY: <Company Name>			
		TITLE: <Title>			
CHECKED: <Checked By>	DATED: <Checked Date>	CODE: <Code>	SIZE: A0	DRAWING NO: <Drawing Number>	REV: <Revision>
QUALITY CONTROL: <QC By>	DATED: <QC Date>				
RELEASED: <Released By>	DATED: <Release Date>	SCALE: <Scale>		SHEET: 11 OF 21	

REVISION RECORD			
LTR	ECO NO:	APPROVED:	DATE:

Main Camera A

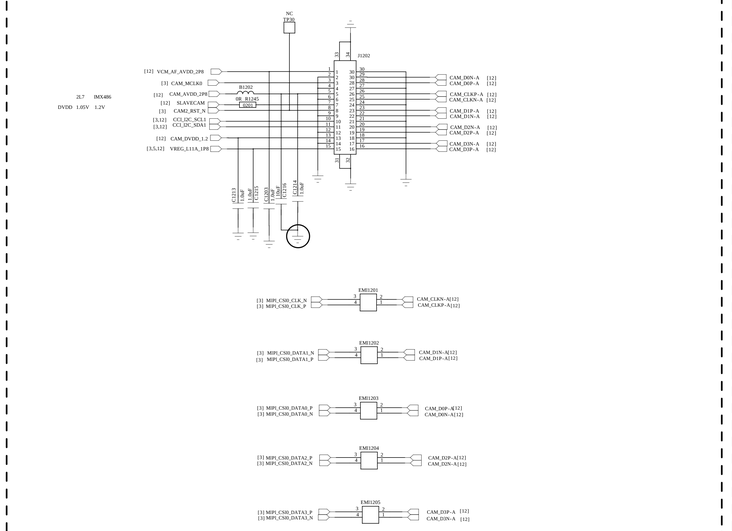

Main Camera B

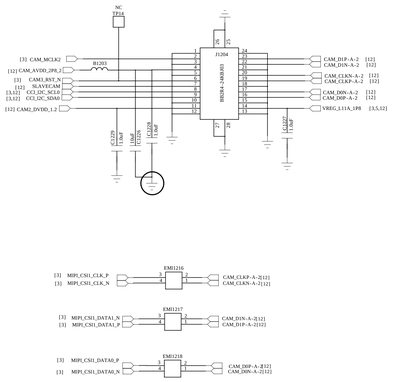

LCM

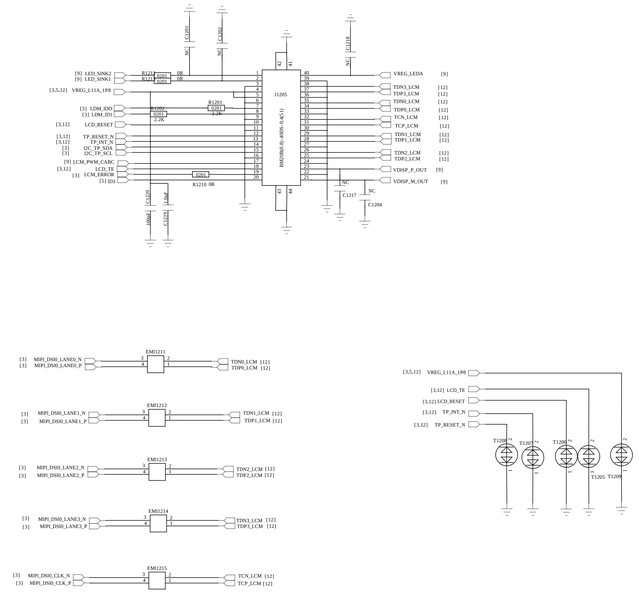

Front Camera_A

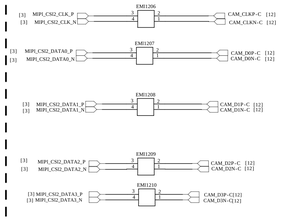

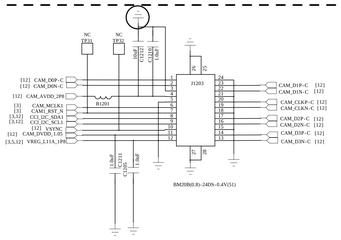

Front Camera_B

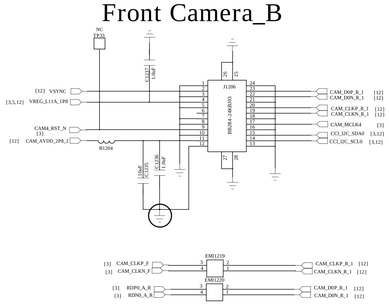

Schematic design notice of "63_PERI_CAMERA_KEYPAD" page.

Note 62-1: The VCC of I2C_0 is pulled to "VCAM_IO_PMU".

Note 62-2: I2C control interface of front camera (with AF) must be assigned to I2C-2 bus when PIP/VIV feature be supported.

Note 62-3: Reserve a capacitor (27pF) on camera's MCLK and shunt it to GND to prevent GPS de-sense.

Camera Power

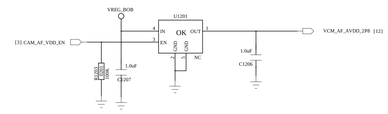

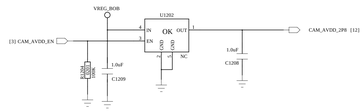

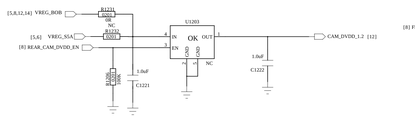

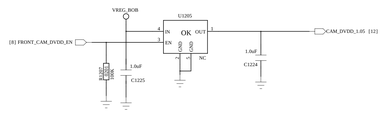

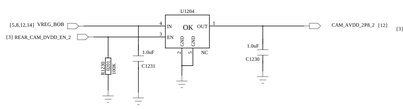

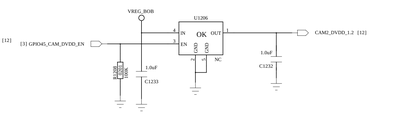

Flash Light

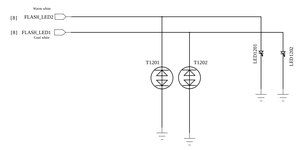

COMPANY: <Company Name>					
TITLE: <Title>					
DRAWN: <Drawn By>	DATED: <Drawn Date>				
CHECKED: <Checked By>	DATED: <Checked Date>	CODE: <Code>	SIZE: A0	DRAWING NO: <Drawing Number>	REV: <Revision>
QUALITY CONTROL: <QC By>	DATED: <QC Date>				
RELEASED: <Released By>	DATED: <Release Date>	SCALE: <Scale>		SHEET: 12 21	

REVISION RECORD			
LTR	ECO NO:	APPROVED:	DATE:

Battery Connector

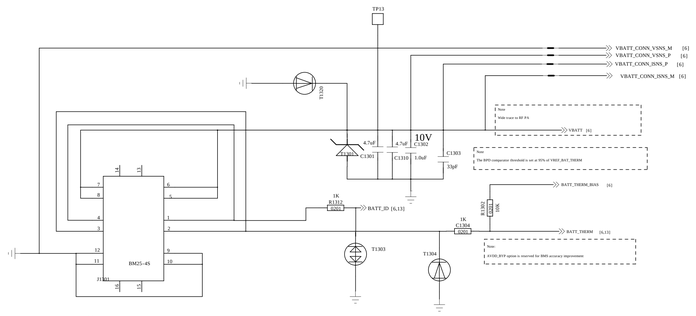

Note:
Battery ID resistor value require 20K~100K.

SUB_FPC

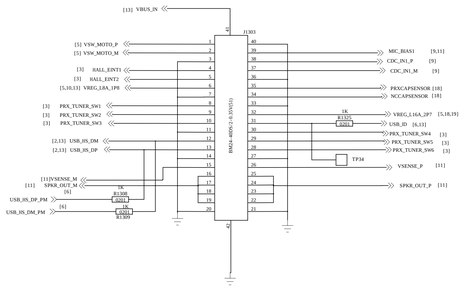

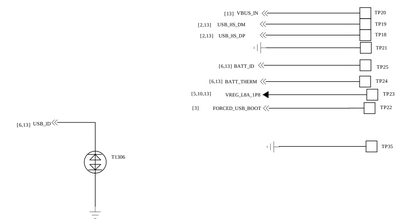

OVP

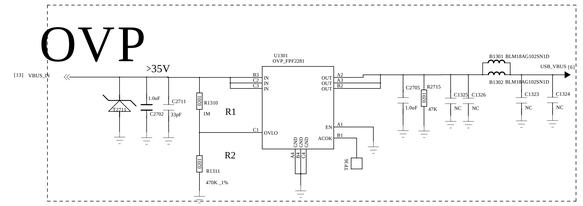

SIM&SD

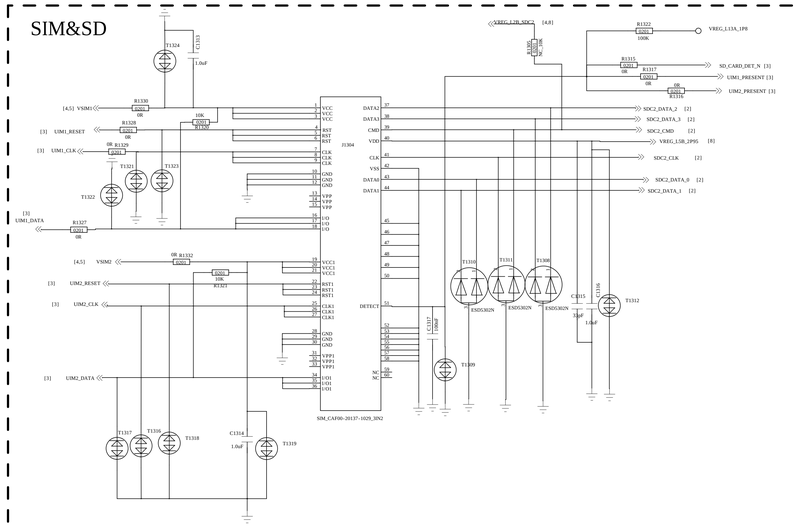

Sider Key

Signal	Description
KPSNS0	Volume Up
PM_RST_N	Volume Down
KYPD_PWR_N	PWER_ON
PM_RST_N + KYPD_PWR_N	Hardware Reset

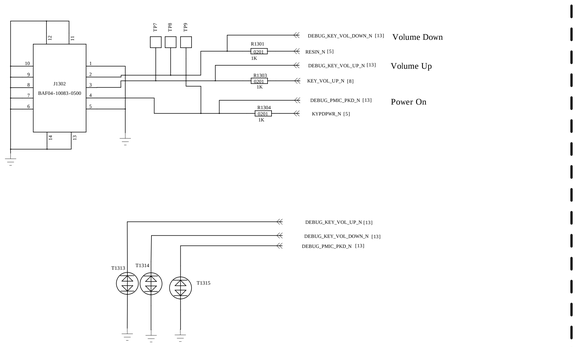

SUB_LED

COMPANY: <Company Name>				
TITLE: <Title>				
DRAWN: <Drawn By>	DATED: <Drawn Date>	CODE: <Code>	SIZE: A0	DRAWING NO: <Drawing Number>
CHECKED: <Checked By>	DATED: <Checked Date>			REV: <Revision>
QUALITY CONTROL: <QC By>	DATED: <QC Date>			
RELEASED: <Released By>	DATED: <Release Date>	SCALE: <Scale>	SHEET: 13 OF 21	

REVISION RECORD			
LTR	ECO NO:	APPROVED:	DATE:

M-Sensor

M-Sensor I2C Address: 0x0C

CAD	
0	0X0C
1	0X0D

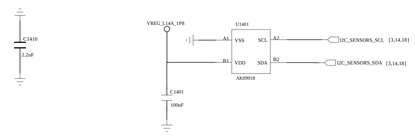

P_SENSOR

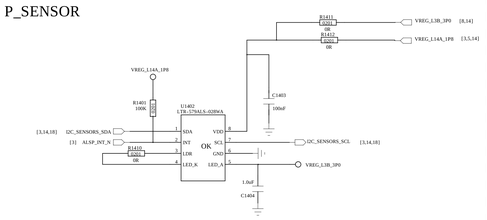

G+Gyro-Sensor

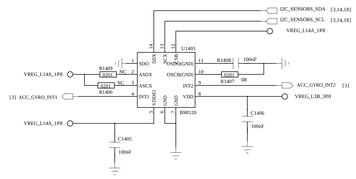

RGB

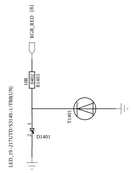

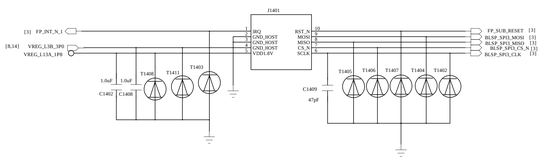

IR

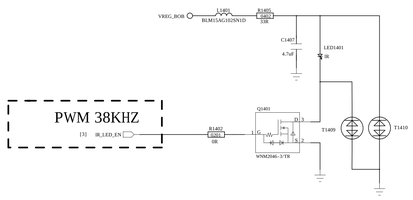

DRAWN: <Drawn By>	DATED: <Drawn Date>	COMPANY: <Company Name>			
		TITLE: <Title>			
CHECKED: <Checked By>	DATED: <Checked Date>	CODE: <Code>	SIZE: A0	DRAWING NO: <Drawing Number>	REV: <Revision>
QUALITY CONTROL: <QC By>	DATED: <QC Date>				
RELEASED: <Released By>	DATED: <Release Date>	SCALE: <Scale>		SHEET: 14 OF 21	

REVISION RECORD			
LTR	ECO NO:	APPROVED:	DATE:

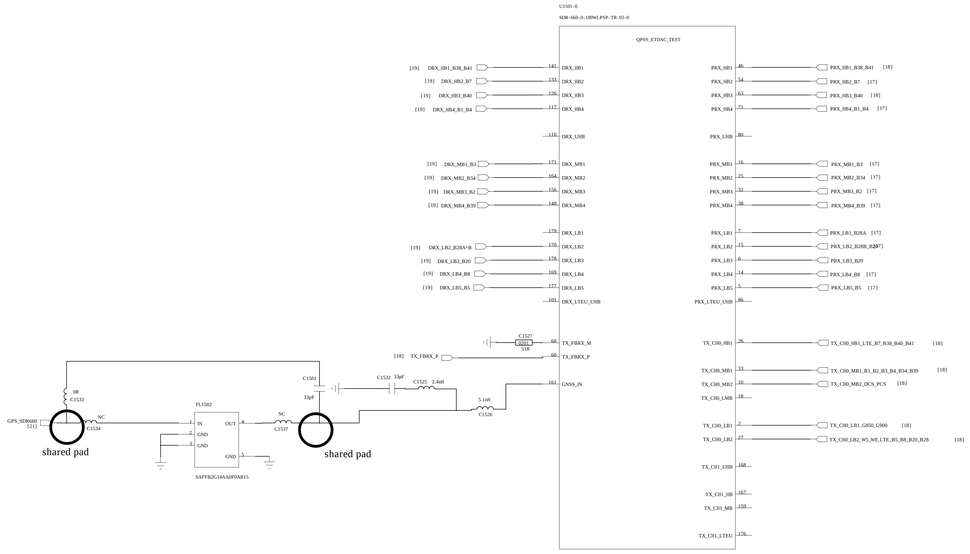

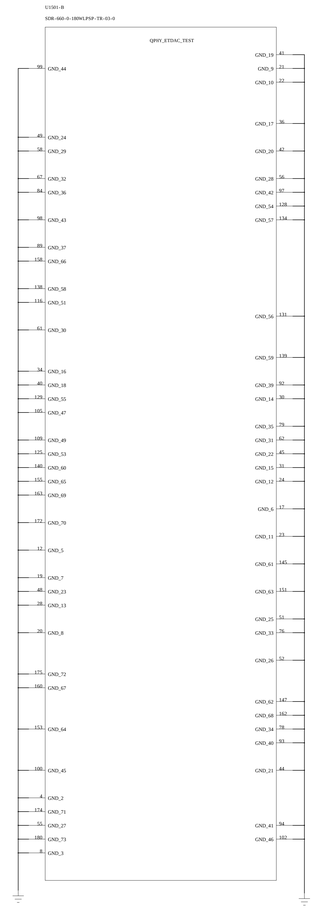

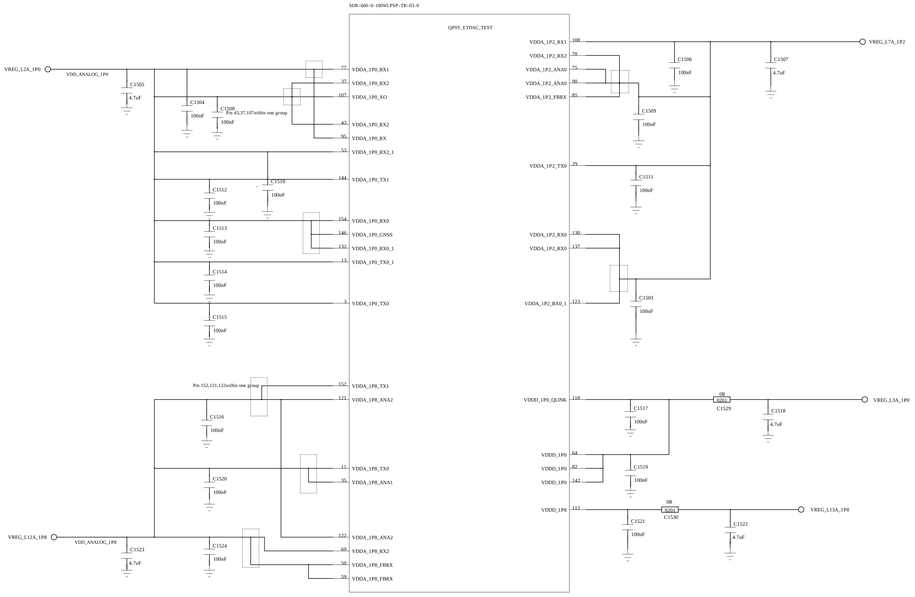

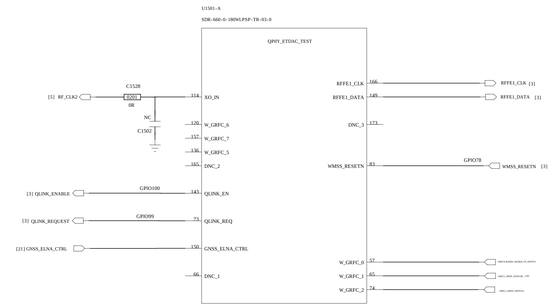

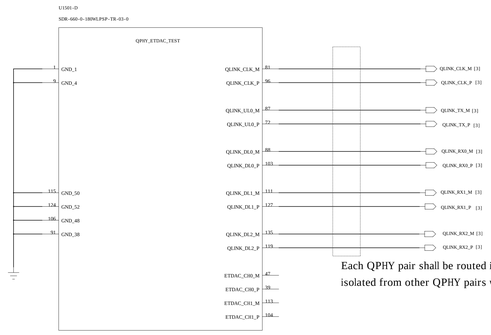

Each QPHY pair shall be routed in a channel together isolated from other QPHY pairs with surrounding gnd

QPHY_ETDAC_TEST

DRAWN: <Drawn By>	DATED: <Drawn Date>	COMPANY: <Company Name>			
CHECKED: <Checked By>	DATED: <Checked Date>	TITLE: <Title>			
QUALITY CONTROL: <QC By>	DATED: <QC Date>	CODE: <Code>	SIZE: A0	DRAWING NO: <Drawing Number>	REV: <Revision>
RELEASED: <Released By>	DATED: <Release Date>	SCALE: <Scale>		SHEET: 19 OF 21	

REVISION RECORD			
LTR	ECO NO:	APPROVED:	DATE:

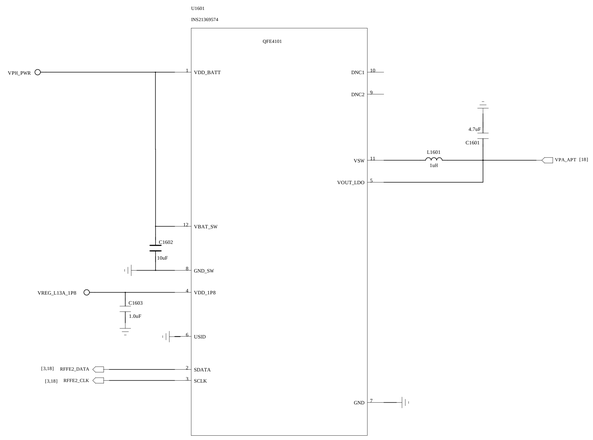

		COMPANY: <Company Name>			
		TITLE: <Title>			
DRAWN: <Drawn By>	DATED: <Drawn Date>				
CHECKED: <Checked By>	DATED: <Checked Date>	CODE: <Code>	SIZE: A0	DRAWING NO: <Drawing Number>	REV: <Revision>
QUALITY CONTROL: <QC By>	DATED: <QC Date>				
RELEASED: <Released By>	DATED: <Release Date>	SCALE: <Scale>		SHEET: 16 OF 21	

REVISION RECORD			
LTR	ECO NO:	APPROVED:	DATE:

TRX_B7

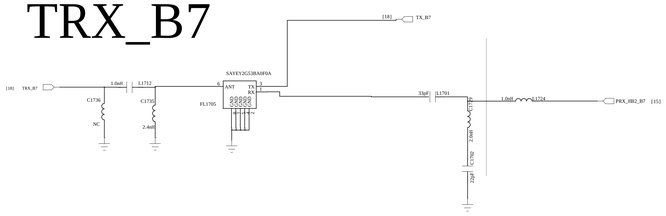

TRX_B1

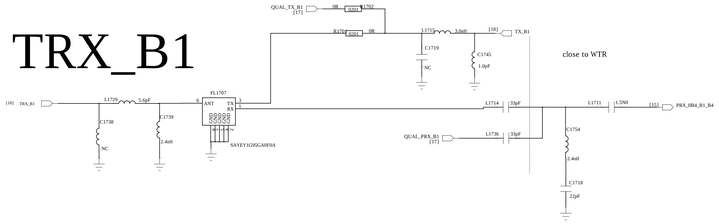

RF1630	
MODE	VC1
RFIN - - RF1	0
RFIN - - RF2	1

TRX_B8

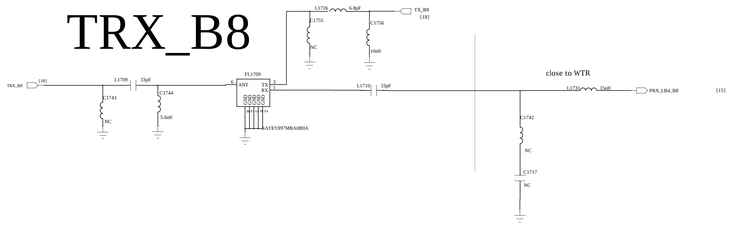

TRX_B1_B3_B4

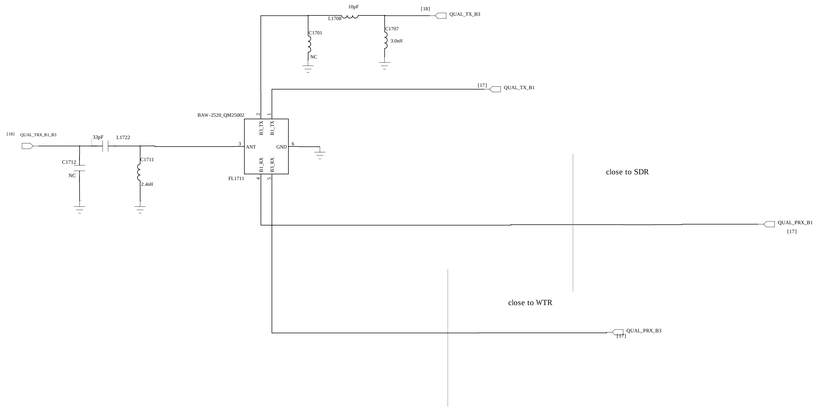

TRX_B2

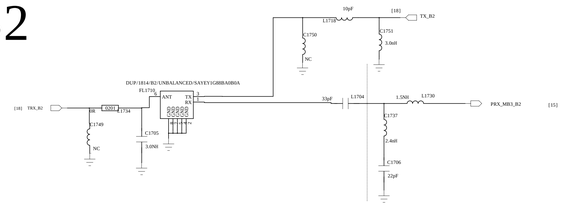

TRX_B3

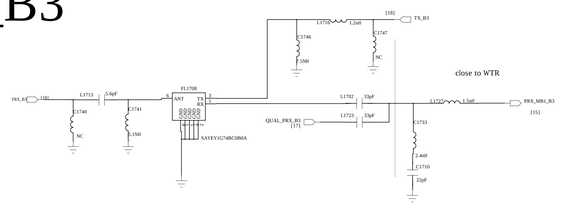

TRX_TDS_B34_B39

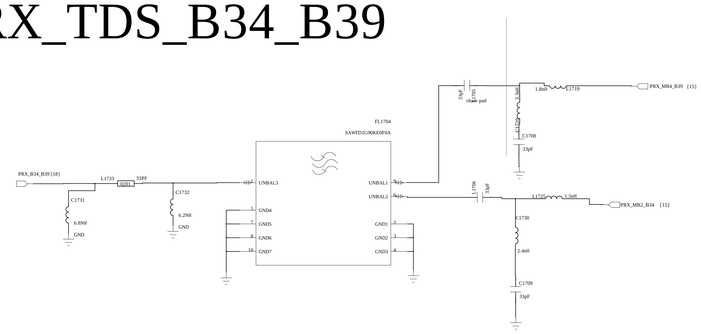

TRX_B5

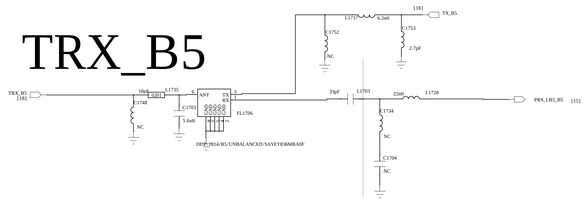

TRX_B28A

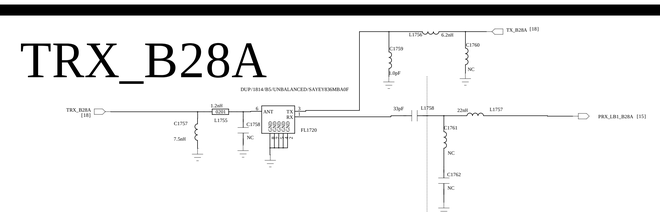

TRX_B20/B28B Shared with B34_39_RX

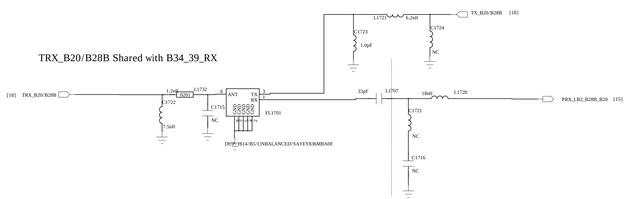

		COMPANY: <Company Name>			
		TITLE: <Title>			
DRAWN: <Drawn By>	DATED: <Drawn Date>				
CHECKED: <Checked By>	DATED: <Checked Date>	CODE: <Code>	SIZE: A0	DRAWING NO: <Drawing Number>	REV: <Revision>
QUALITY CONTROL: <QC By>	DATED: <QC Date>				
RELEASED: <Released By>	DATED: <Release Date>	SCALE: <Scale>		SHEET: 19 OF 21	

REVISION RECORD			
LTR	ECO NO:	APPROVED:	DATE:

If walsin,R61,R62 should be NC

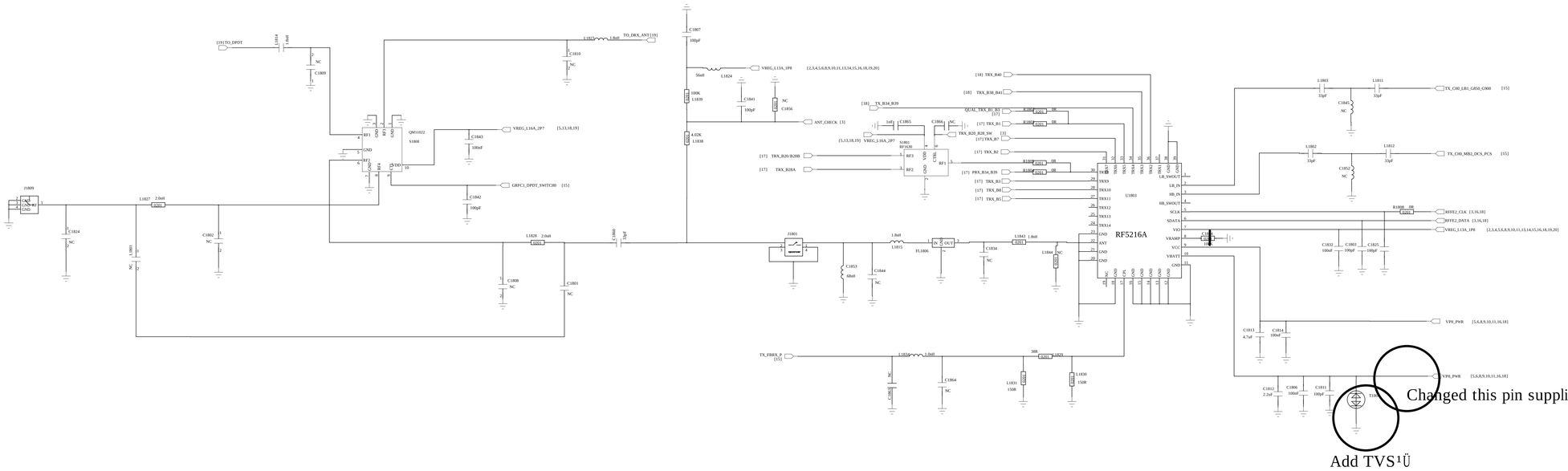

SAR Sensor

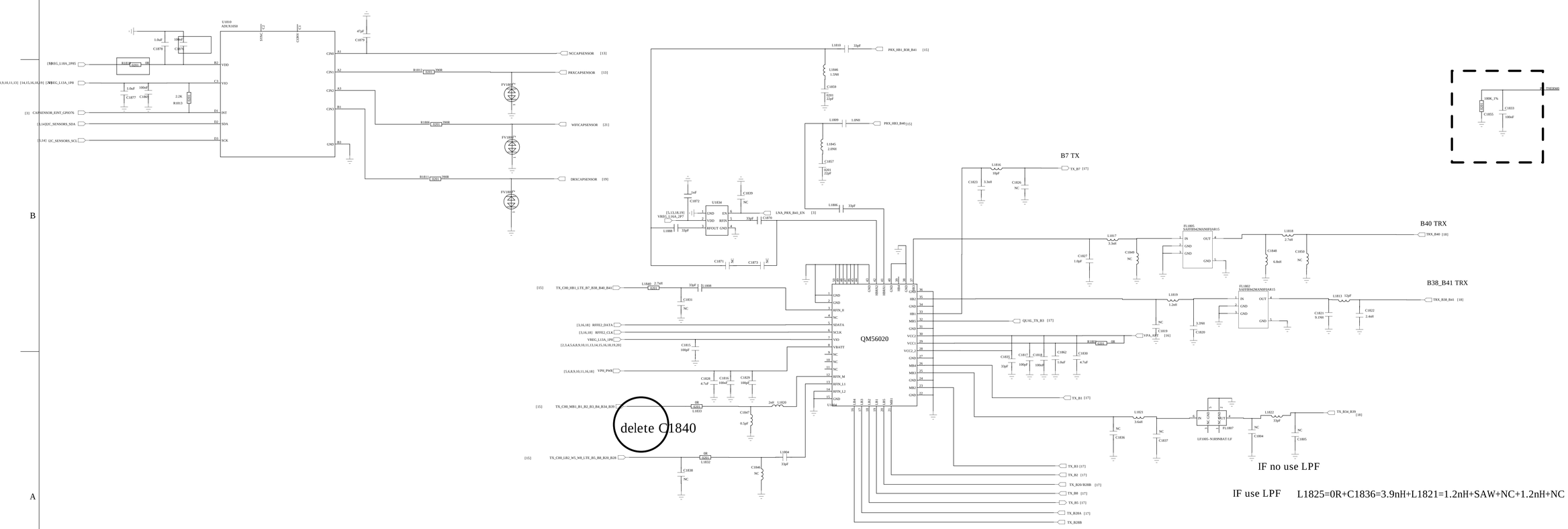

COMPANY: <Company Name>			
TITLE: <Title>			
DRAWN: <Drawn By>	DATED: <Drawn Date>		
CHECKED: <Checked By>	DATED: <Checked Date>	CODE: <Code>	SIZE: A0	DRAWING NO: <Drawing Number>	REV: <Revision>
QUALITY CONTROL: <QC By>	DATED: <QC Date>		
RELEASED: <Released By>	DATED: <Release Date>	SCALE: <Scale>	SHEET: 10 OF 21

REVISION RECORD			
LTR	ECO NO:	APPROVED:	DATE:

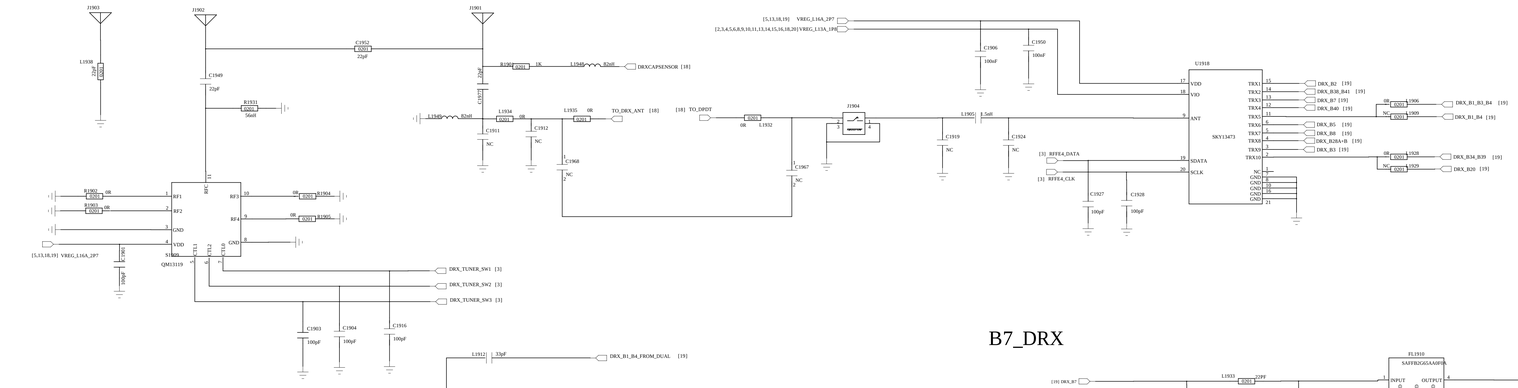

B1_B3_B4_DRX

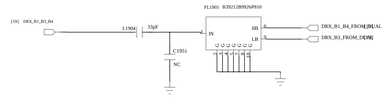

B7_DRX

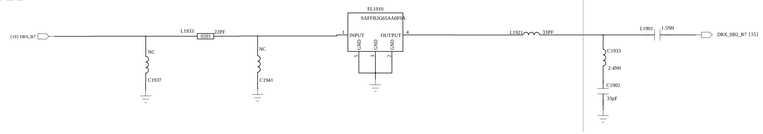

B1&B4_DRX

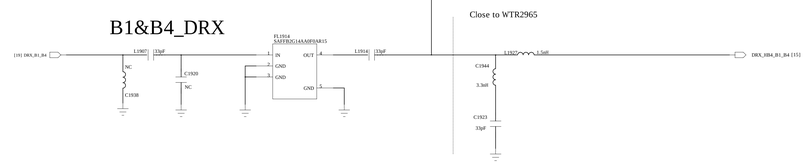

B2_DRX

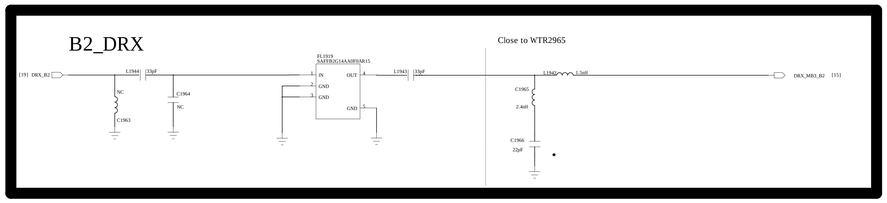

TRX_TDS_B34_B39

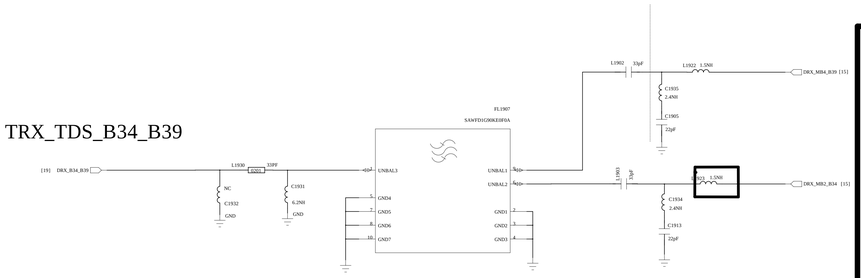

B40_DRX

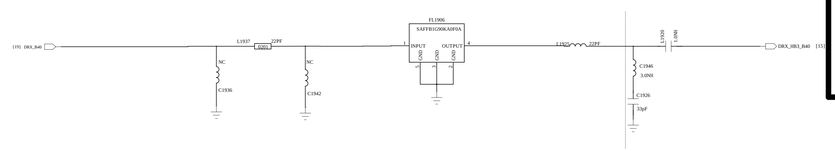

B3_DRX

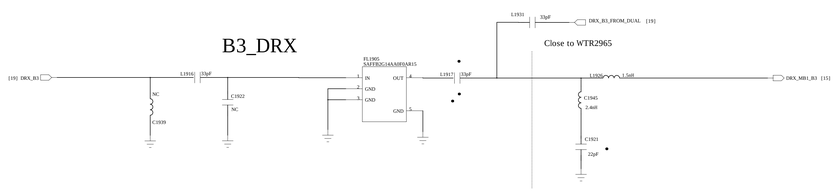

B38_B41_DRX

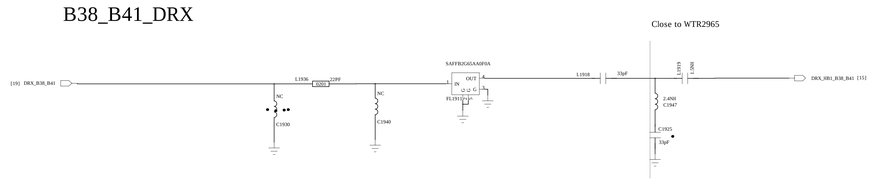

B5_DRX

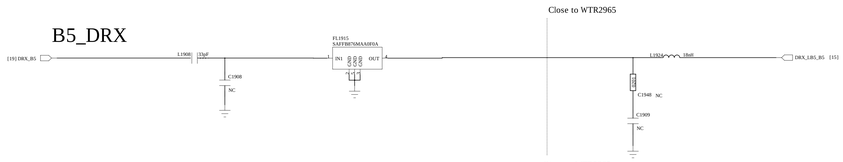

B8 DRX

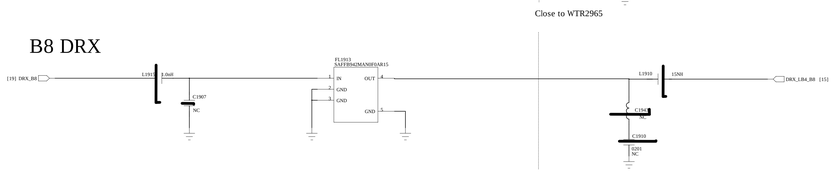

B20 DRX

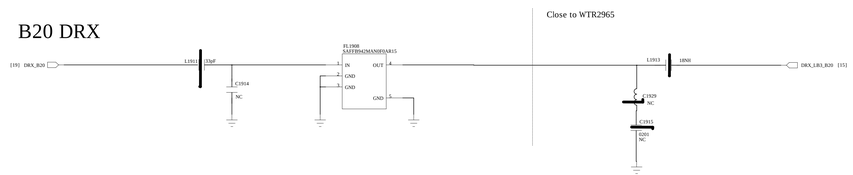

B28 A+B DRX

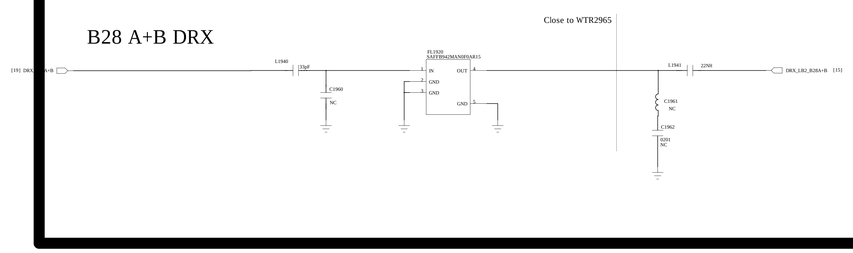

		COMPANY: <Company Name>			
		TITLE: <Title>			
DRAWN: <Drawn By>	DATED: <Drawn Date>				
CHECKED: <Checked By>	DATED: <Checked Date>	CODE: <Code>	SIZE: A0	DRAWING NO: <Drawing Number>	REV: <Revision>
QUALITY CONTROL: <QC By>	DATED: <QC Date>				
RELEASED: <Released By>	DATED: <Release Date>	SCALE: <Scale>		SHEET: 19 21	

REVISION RECORD			
LTR	ECO NO:	APPROVED:	DATE:

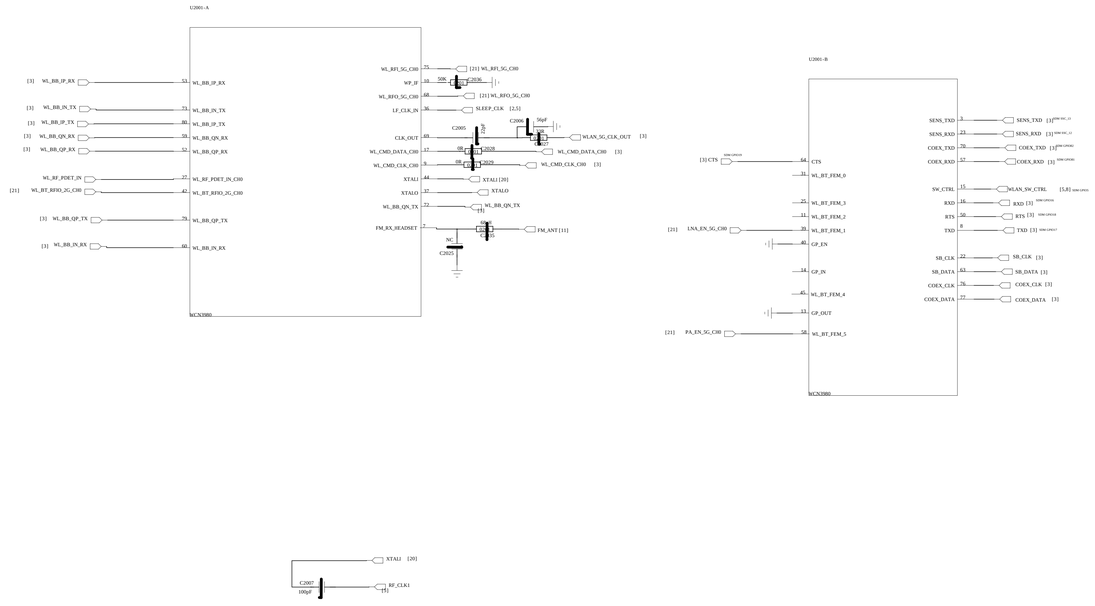

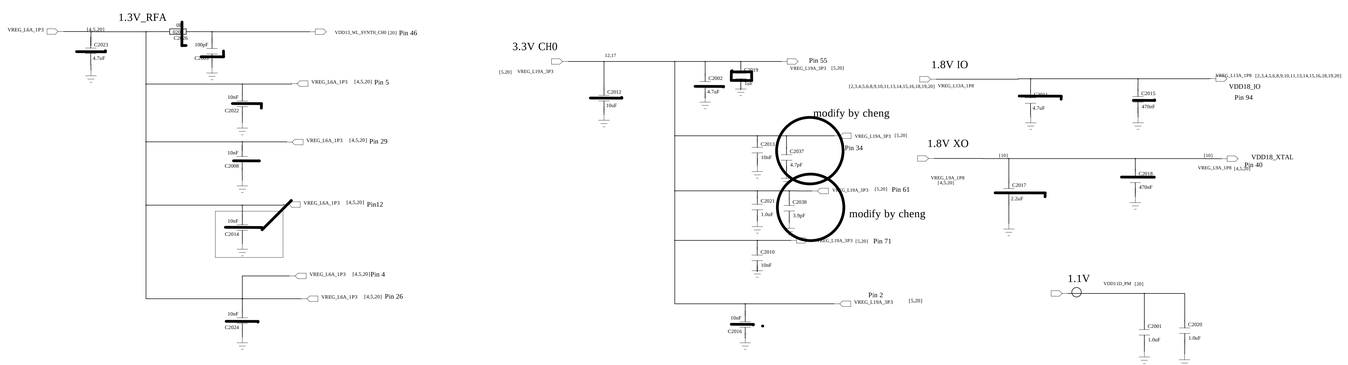

COMPANY: <Company Name>					
TITLE: <Title>					
DRAWN: <Drawn By>	DATED: <Drawn Date>	CODE: <Code>	SIZE: A0	DRAWING NO: <Drawing Number>	REV: <Revision>
CHECKED: <Checked By>	DATED: <Checked Date>				
QUALITY CONTROL: <QC By>	DATED: <QC Date>				
RELEASED: <Released By>	DATED: <Release Date>	SCALE: <Scale>		SHEET: 20 21	

REVISION RECORD			
LTR	ECO NO.	APPROVED:	DATE:

GPS

High rejection saw

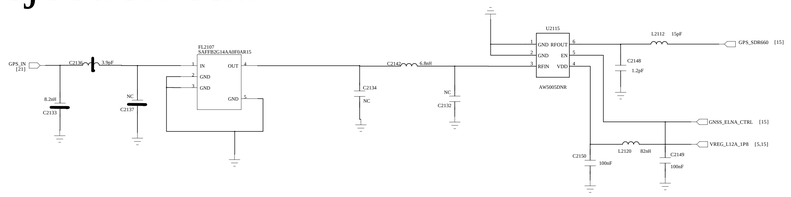

GPS_2G_5G_ANT

used for connect to ground

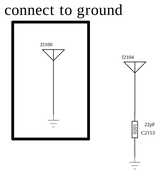

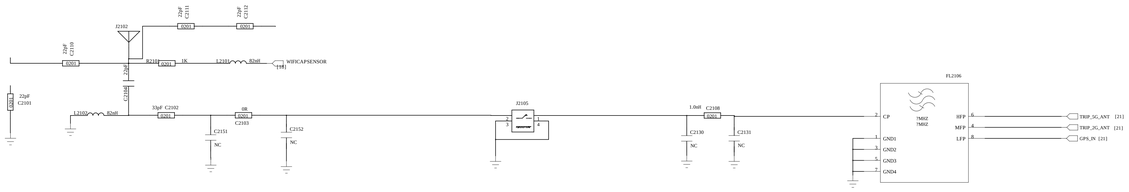

2G_5G_WLAN_FEM

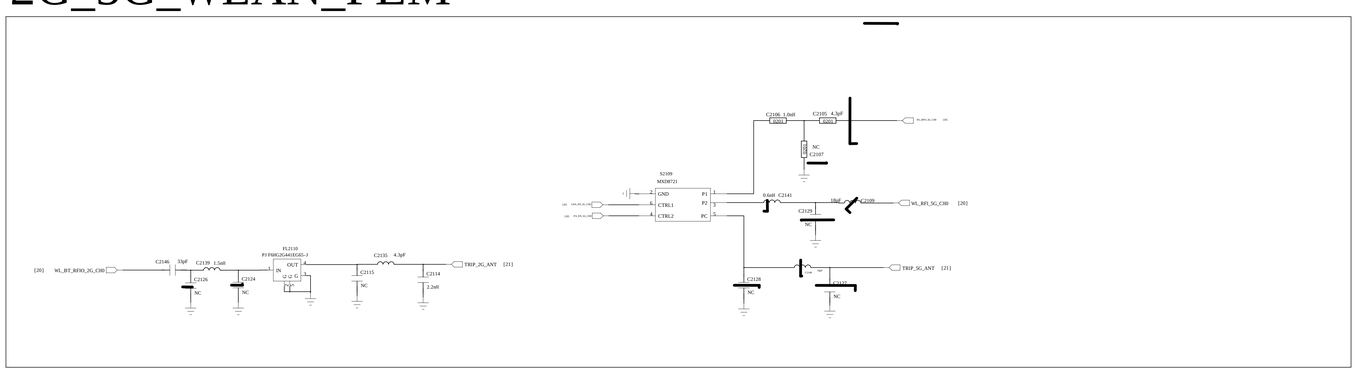

		COMPANY: <Company Name>			
		TITLE: <Title>			
DRAWN: <Drawn By>	DATED: <Drawn Date>				
CHECKED: <Checked By>	DATED: <Checked Date>	CODE: <Code>	SIZE: A0	DRAWING NO: <Drawing Number>	REV: <Revision>
QUALITY CONTROL: <QC By>	DATED: <QC Date>				
RELEASED: <Released By>	DATED: <Release Date>	SCALE: <Scale>		SHEET: 21 OF 21	